LONG SEAMS

COURSE	ORIENTATION	ORIENTATION
1	0°	197.5°

*VERT – TOP TO BOTTOM

Ship loose items:
*NONE

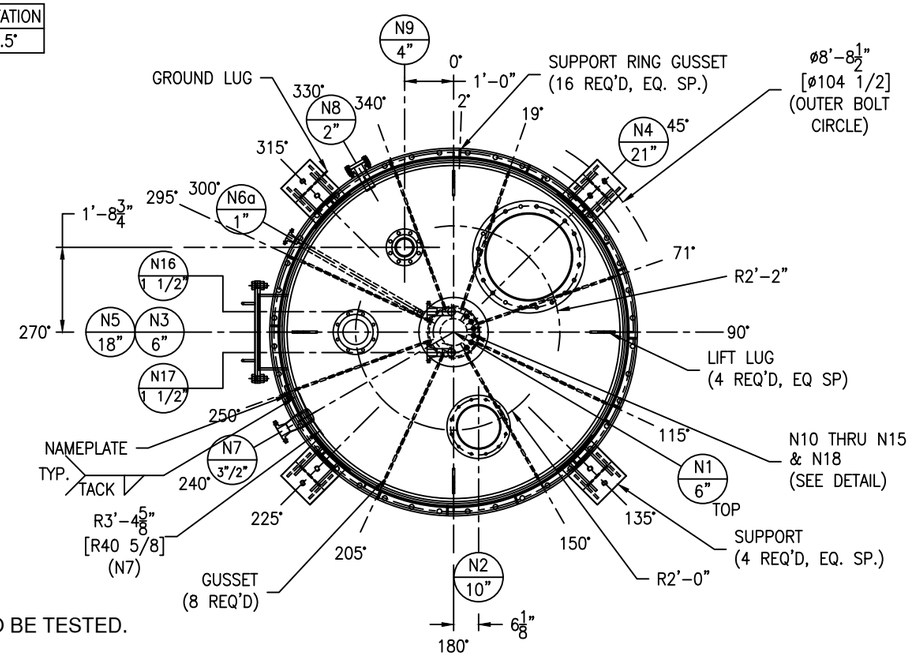

*NOTE: ALL REPADS TO BE TESTED.
(SEE NOTE 3)

*NOTE: ALL ELEVATION ARE PULLED FROM WELD SEAM FOR EASE OF FABRICATION

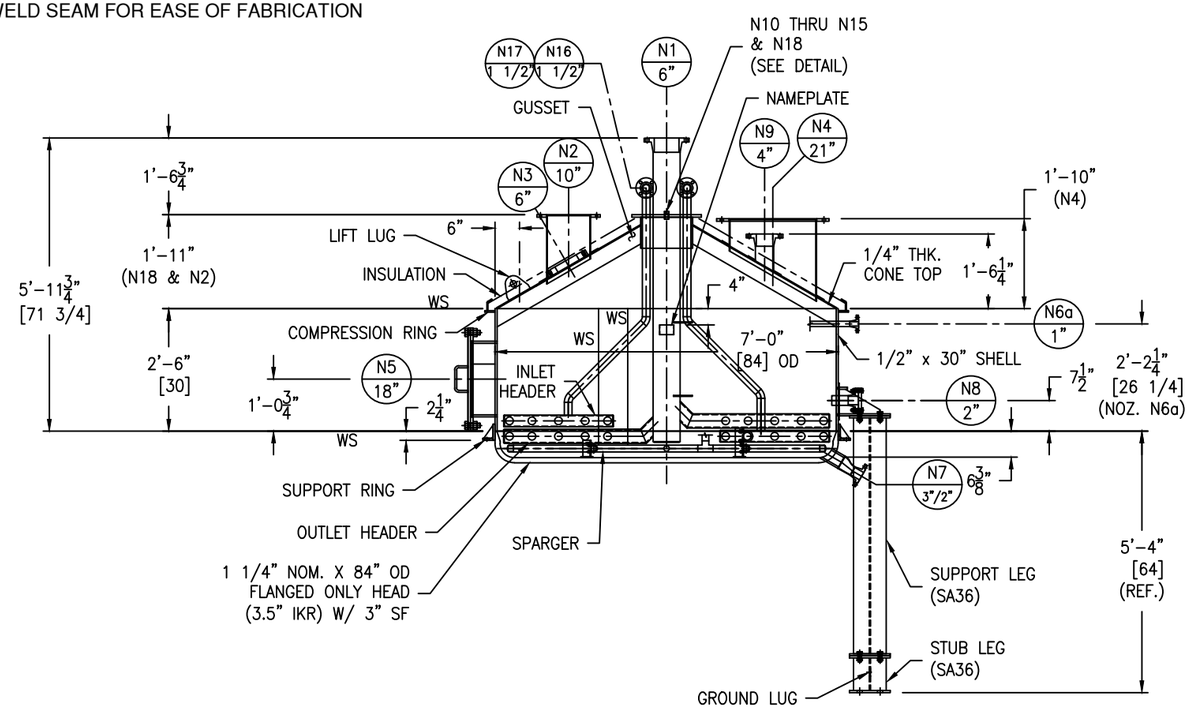

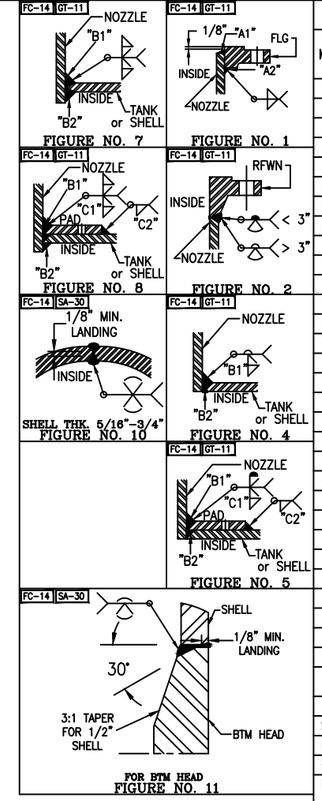

NOZZLE SCHEDULE

MARK	SERVICE	SIZE	RATING	TYPE / STYLE	NECK SCHED.	PROJECTION EXT. (E)	PROJECTION INT. (MIN.)	WELD FIGURE	REPAD SIZE (WIDTH X THK.)	WELD SIZE "A1"	WELD SIZE "A2"	WELD SIZE "B1"	WELD SIZE "B2"	WELD SIZE "C1"	WELD SIZE "C2"
N1	COOLING VENT	6"	150#	RFWN	40	SEE DWG	SEE DWG	2,9	–	–	–	1/4	1/4	–	–
N2	GAS OUTLET	10"	–	FAB	10	SEE DWG	1"	1,8	2" X 3/16"	1/4	3/16	1/4	1/4	3/16	–
N3	PRESS INSTRUMENT	6"	150#	STUDPAD	–	–	–	4	–	–	–	1/4	1/4	–	–
N4	RUPTURE DISK VENT	21"	–	FAB	3/16"	SEE DWG	1"	1,8	2" X 3/16"	1/4	3/16	1/4	1/4	3/16	–
N5	MANWAY	18"	–	FAB	1/2"	6"	–	1,4	–	1/4	9/16	3/8	1/8	–	–
N6a	SPARGER (EXTERIOR)	1"	150#	RFWN	40	5"	SEE DWG	2,7	–	–	–	3/16	1/8	–	–
N6b	SPARGER (INTERIOR)	1 1/4"	150#	RFSO	40	–	SEE DWG	1	–	3/16	3/16	–	–	–	–
N6c	SPARGER (INTERIOR)	1 1/4"	150#	RFSO	40	–	SEE DWG	1	–	3/16	3/16	–	–	–	–
N7	DRAIN	3"/2"	150#	RFWN	160/40	SEE DWG	–	2,4	–	–	–	3/16	3/16	–	–
N8	SPARE	2"	150#	RFWN W/ BLIND	80	5"	1"	2,7	–	–	–	3/16	3/16	–	–
N9	LEVEL INSTRUMENT	4"	150#	RFWN	40	5"	–	2,5	2" X 3/16"	–	–	3/16	3/16	3/16	–
N10	TEMP INSTRUMENT	1/2"	3000#	SOCK FULL CPL	–	SEE DWG	SEE DWG	SEE DWG	–	–	–	SEE DWG	SEE DWG	–	–
N11	TEMP INSTRUMENT	1/2"	3000#	SOCK FULL CPL	–	SEE DWG	SEE DWG	SEE DWG	–	–	–	SEE DWG	SEE DWG	–	–
N12	TEMP INSTRUMENT	1/2"	3000#	SOCK FULL CPL	–	SEE DWG	SEE DWG	SEE DWG	–	–	–	SEE DWG	SEE DWG	–	–
N13	TEMP INSTRUMENT	1/2"	3000#	SOCK FULL CPL	–	SEE DWG	SEE DWG	SEE DWG	–	–	–	SEE DWG	SEE DWG	–	–
N14	TEMP INSTRUMENT	1/2"	3000#	SOCK FULL CPL	–	SEE DWG	SEE DWG	SEE DWG	–	–	–	SEE DWG	SEE DWG	–	–
N15	TEMP INSTRUMENT	1/2"	3000#	SOCK FULL CPL	–	SEE DWG	SEE DWG	SEE DWG	–	–	–	SEE DWG	SEE DWG	–	–
N16	COOLING INLET	1 1/2"	150#	RFWN	40	SEE DWG	SEE DWG	2,9	–	–	–	3/16	–	–	–
N17	COOLING INLET	1 1/2"	150#	RFWN	40	SEE DWG	SEE DWG	2,9	–	–	–	3/16	–	–	–
N18	COOLING FEED NECK	12"	–	FAB	40S	SEE DWG	SEE DWG	7	–	–	–	3/16	3/16	–	–

MATERIALS OF CONSTRUCTION

	VESSEL
SHELL	SA240-304/304L
HEADS	SA240-304/304L
RIM ANGLE	–
NOZZLE NECKS	SA240-304/304L & SA312-304/304L SMLS & SA403-304/304L WPS
NOZZLE FLANGES	SA240-304/304L & SA182F-304/304L
MANWAY NECKS	SA240-304/304L
MANWAY FLANGES	SA240-304/304L
GASKETS	TEFLON
BOLTS/STUDS (EXTERIOR)	SA193-B7 (PLATED)
NUTS (EXTERIOR)	SA194-2H (PLATED)
BOLTS/STUDS (INTERIOR)	SA193-B8
NUTS (INTERIOR)	SA194-8
REPADS	SA240-304/304L
COUPLINGS	SA182F-304/304L
SUPPORTS/HOLD DOWNS	SA479-304/304L, SA240-304/304L & SA36
LIFTING LUGS	SA240-304/304L
VACUUM RINGS	SA479-304/304L
INSULATION RINGS	SA479-304/304L
GROUND LUG	SA36
HANDRAIL CLIPS	–
PLATFORM	–
PLATFORM CLIPS	–
DIPTUBE SUPPORT	–
INTERNAL HEADER/SPARGER	SA312-304/304L SMLS
INTERNAL SUPPORT	SA479-304/304L
JACKET NOZZLE NECKS	–
JACKET NOZZLE FLANGES	–

DESIGN DATA

	VESSEL
DESIGN AND FAB. CODE	ASME
CERT. STAMP REQ'D.	YES
DESIGN PRESSURE	13 PSIG
DESIGN TEMPERATURE	500° F
MIN. DESIGN METAL TEMP.	-20° F @ 13 PSIG
OPERATING PRESSURE	–
OPERATING TEMPERATURE	–
JOINT EFFICIENCY HEADS	0.70
JOINT EFFICIENCY SHELL	0.70
CORROSION ALLOWANCE	0"
SPECIFIC GRAVITY	1.0
EARTHQUAKE ZONE	Ss = (0.073) S1 = (0.031)
WIND LOAD	90 MPH
STRESS RELIEF	NOT REQ'D
RADIOGRAPHIC EXAM	NOT REQ'D
DYE PENETRANT EXAM	NOT REQ'D
MAGNETIC PARTICLE EXAM	NOT REQ'D
HYDROSTATIC TEST	15 PSIG / GAUGE #1
PNEUMATIC TEST	–
COIL HYDRO TEST	195 PSIG / GAUGE #13
COIL DESIGN AND FAB. CODE	ASME
COIL CERT. STAMP REQ'D.	YES
COIL DESIGN PRESSURE	150 PSIG
COIL DESIGN TEMPERATURE	500° F
COIL MIN. DESIGN METAL TEMP.	-20° F @ 150 PSIG
COIL OPERATING PRESSURE	–
COIL OPERATING TEMPERATURE	–
COIL JOINT EFFICIENCY HEADS	–
COIL JOINT EFFICIENCY SHELL	–

VESSEL FINISH

INTERIOR WELD TREATMENT:	SAV TANK STANDARD
EXTERIOR WELD TREATMENT:	SAV TANK STANDARD
SAV TANK FINISHING STANDARD:	SEE NOTE 6
INSULATION:	BY OTHERS
PAINTING:	SEE NOTE 7

VESSEL CAPACITY AND WEIGHTS

OPERATING CAPACITY	–
FULL CAPACITY	1,055 GAL.
EMPTY SHIPPING WEIGHT	6,230 LBS.
WEIGHT FULL OF WATER	15,120 LBS.
WEIGHT FULL OF PRODUCT	15,120 LBS.

ASME SECT. VIII, DIV. 1
2023 EDITION

ENG. _____ DATE: _____
Q.C. _____ DATE: _____
A.I. _____ DATE: _____

This drawing is issued for customer approval. please review, make approval changes (if any) in red. check the appropriate box, sign & date.

- ☐ Approval – no changes. Please proceed with fabrication.
- ☐ Approved as noted. Please proceed with fabrication
- ☐ Not approved. Please make changes and resubmit.

Customer signature _____ Date _____

GENERAL NOTES

1.) COVER ALL FLANGES, OPENINGS & MACHINED SURFACES PRIOR TO SHIPMENT UNLESS OTHERWISE NOTED.
2.) BOLT HOLES TO STRADDLE 0° & 180° UNLESS OTHERWISE NOTED.
3.) REPADS TO HAVE (1) ø1/4" NPT TELL-TALE HOLES FOR PNEMATIC TESTING AT 2 PSIG FOR PRESSURE RETAINING PARTS. ALL OTHER REPADS TO HAVE (1) ø1/4" WEEP HOLE AT LOWEST POINT ON PAD.
4.) ASME CODE VESSELS TO BE IN ACCORDANCE WITH UG-80 & UG-81. TOLERANCES: +/- 1/8" FOR DIMENSIONS AND +/- 2 DEGREES FOR ORIENTATIONS.
5.) ASME MATERIALS TO CONFORM TO THE FOLLOWING: FLANGES – B16.5, FITTINGS – B16.9 & COUPLINGS – B16.11.
6.) PICKLE ALL EXTERIOR WELDS. PASSIVATE INTERIOR & EXTERIOR OF VESSEL.
7.) PAINTING (LEGS & LUGS) – SANDBLAST SP6. (1) COAT MACROPOXY 646 YELLOW (5-7 MILS) PAINT.
8.) SAFETY RELIEF VALVE IN LINE BY OTHERS.

REV	D.BY	C.BY	DATE	DESCRIPTION
2				AS BUILT
1	RS	NP	12/17/25	CERTIFIED
0	RS	AD/HP	11/13/25	APPROVAL

⚠ REVISIONS

Savannah Tank & Equipment Corp.
1517 Telfair Road, Savannah, GA 31415
(912) 233-8902

DRAWN BY: RS
CHK'D BY: AD/HP
APPROVED BY: NP
SCALE: 1/2" = 1'-0"

Airgas Nitrous Oxide
SST N2O REACTOR
EQUIP. #R-1
CUST. PO #3000836264

DRAWING NO.: 055-25-1 SHT 1 OF 5 REV. SET 1

FC-14

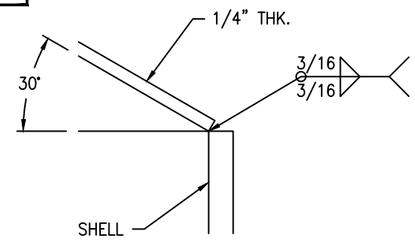

CONICAL HEAD DETAIL

SCALE: 6" = 1'-0"

FC-14

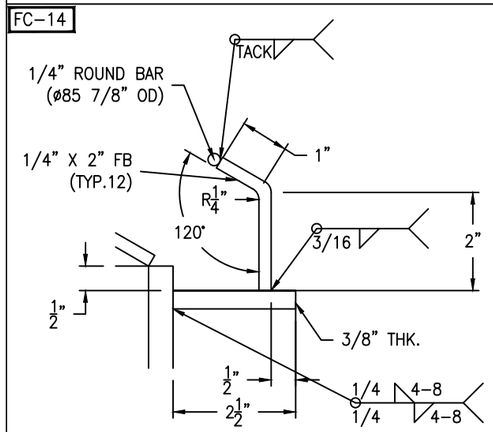

COMPRESSION RING DETAIL

SCALE: 6" = 1'-0"

FC-14 *HOLES TO STRADDLE MAJOR CENTERLINES*

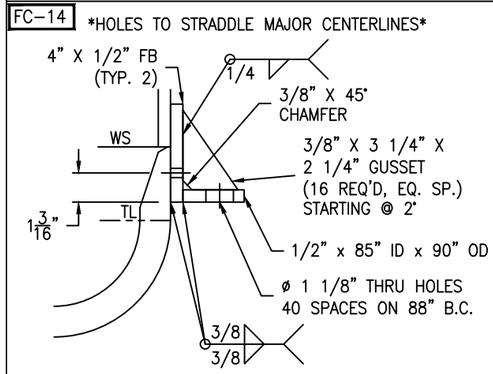

NOTE:
(4) ø3/8" WEEP HOLES TO BE ADDED 90° APART FOR TESTING.

SUPPORT RING DETAIL

SCALE: 3" = 1'-0"

FC-14

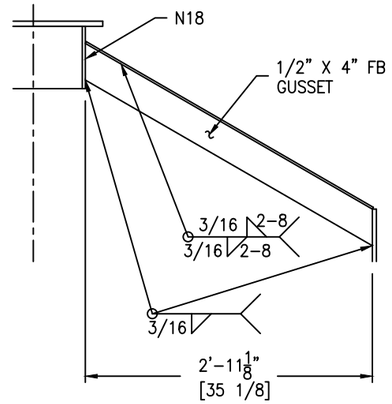

GUSSET DETAIL

(8 REQ'D) SCALE: 1" = 1'-0"

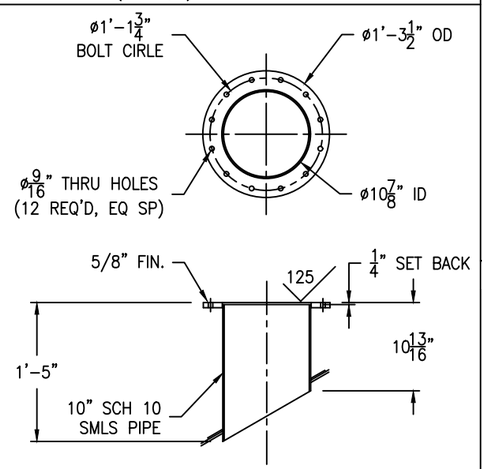

NOZZLE N2 DETAIL

SCALE: 1" = 1'-0"

FC-14

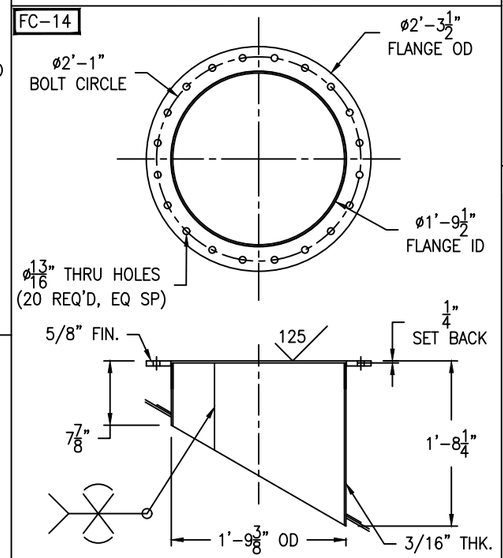

NOZZLE N4 DETAIL

SCALE: 1" = 1'-0"

FC-14

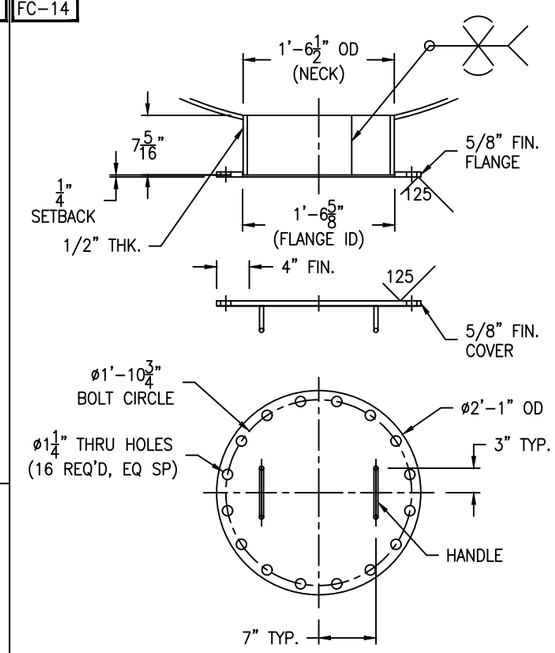

NOZZLE N5 DETAIL

SCALE: 1" = 1'-0"

FC-14

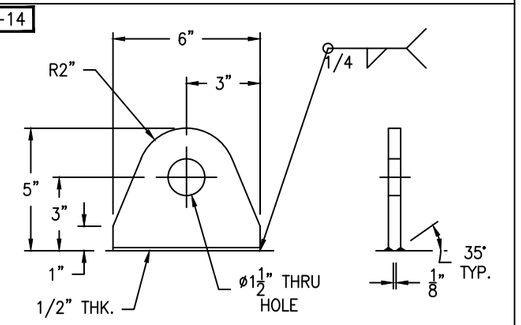

TANK WT. <= 10000#
SHACKLE PIN DIA. = 1"

HEAD LIFT LUG DETAIL

(4 REQ'D) SCALE: 3" = 1'-0"

FC-14

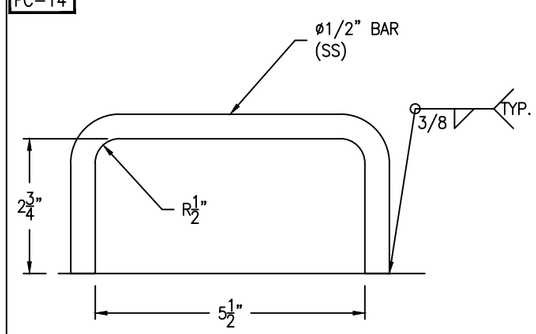

HANDLE DETAIL

(2 REQ'D) SCALE: 6" = 1'-0"

FC-14

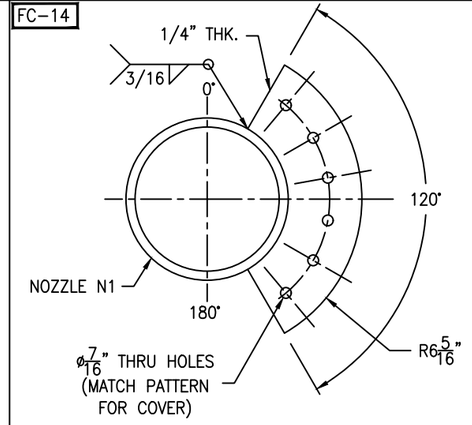

GUIDE PLATE DETAIL

(2 REQ'D) SCALE: 3" = 1'-0"

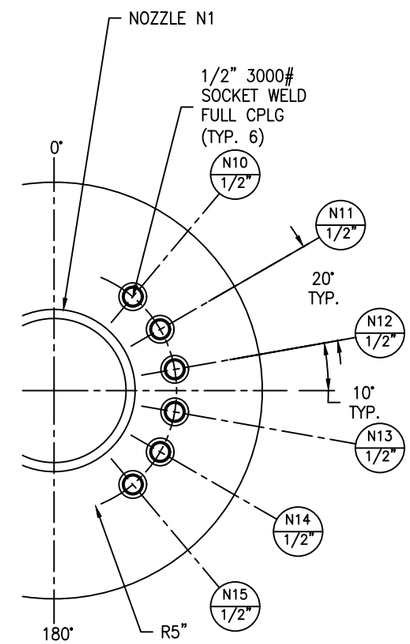

COOLING FEED COUPLINGS DETAIL

SCALE: 3" = 1'-0"

BOLTING FOR BLIND
N5: (16) 1 1/8-7 NC x 3" HH BOLT
(16) 1 1/8-7 NC HH NUT
(1) 25" OD x 18 5/8" ID w/ (16) Ø1 1/4 HOLES
EQ. SPACED ON 22 3/4" BC x 1/8" THK. GASKET
N8: (4) 5/8-11 NC x 2 1/2" HH BOLT
(4) 5/8-11 NC HH NUT
(1) 2" 150# RING GASKET 1/8" THK.

REV	D.BY	C.BY	DATE	DESCRIPTION
2				AS BUILT
1	RS	NP	12/17/25	CERTIFIED
0	RS	AD/HP	11/13/25	APPROVAL

REVISIONS

Savannah Tank & Equipment Corp.
1517 Telfair Road, Savannah, GA 31415
(912) 233-8902

DRAWN BY: RS
CHK'D BY: AD/HP
APPROVED BY: NP
SCALE: 1/2" = 1'-0"

Airgas Nitrous Oxide
SST N2O REACTOR
EQUIP. #R-1
CUST. PO #3000836264

DRAWING NO.: 055-25-2 SHT 2 OF 5 REV. SET 1

FC-14

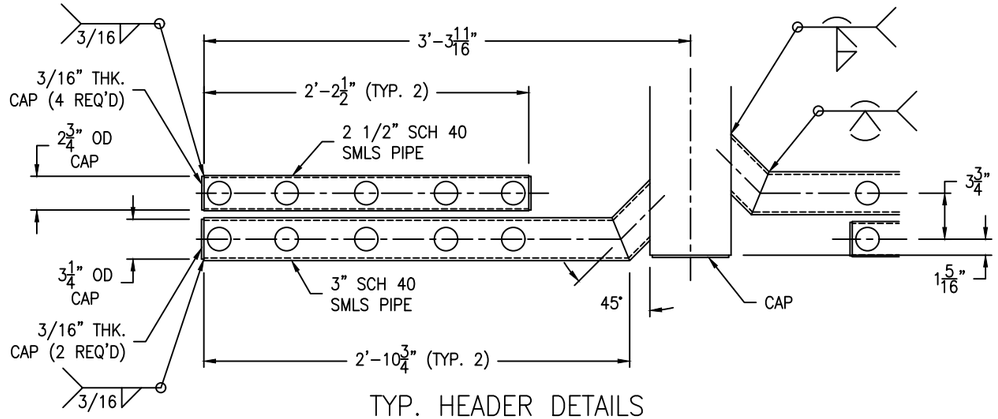

TYP. HEADER DETAILS

SCALE: 1 1/2" = 1'-0"

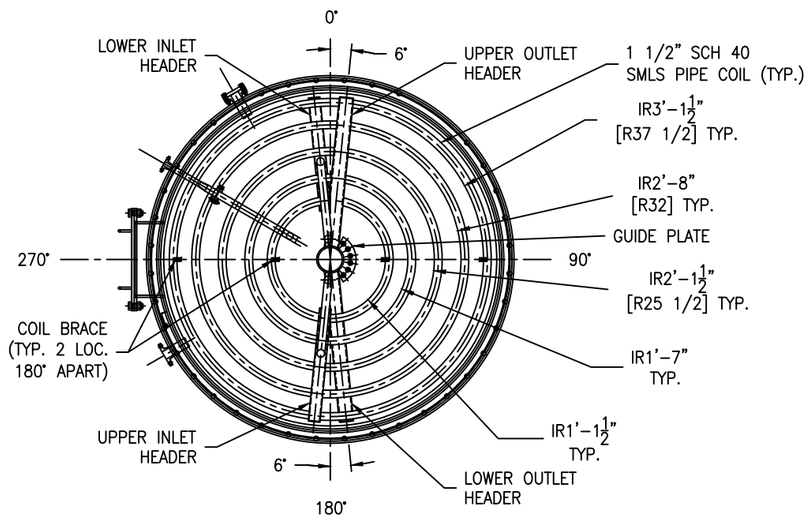

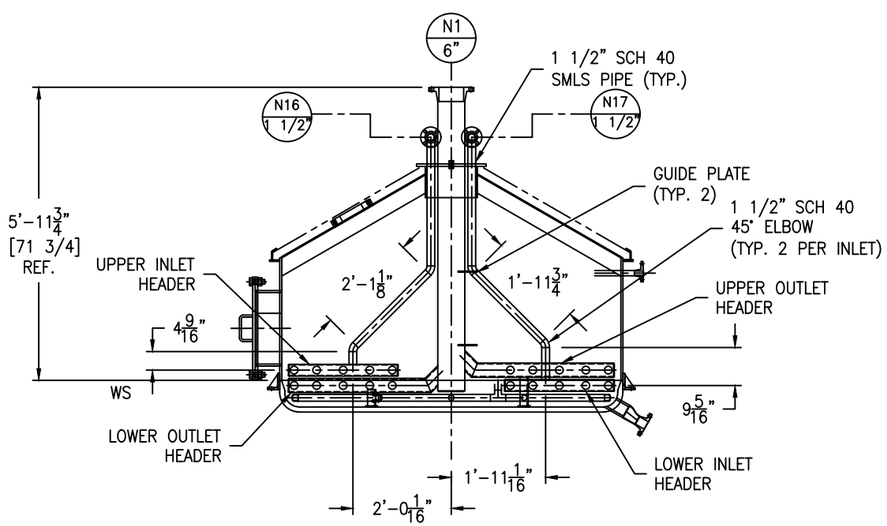

COIL DETAILS

SCALE: 1/2" = 1'-0"

FC-14

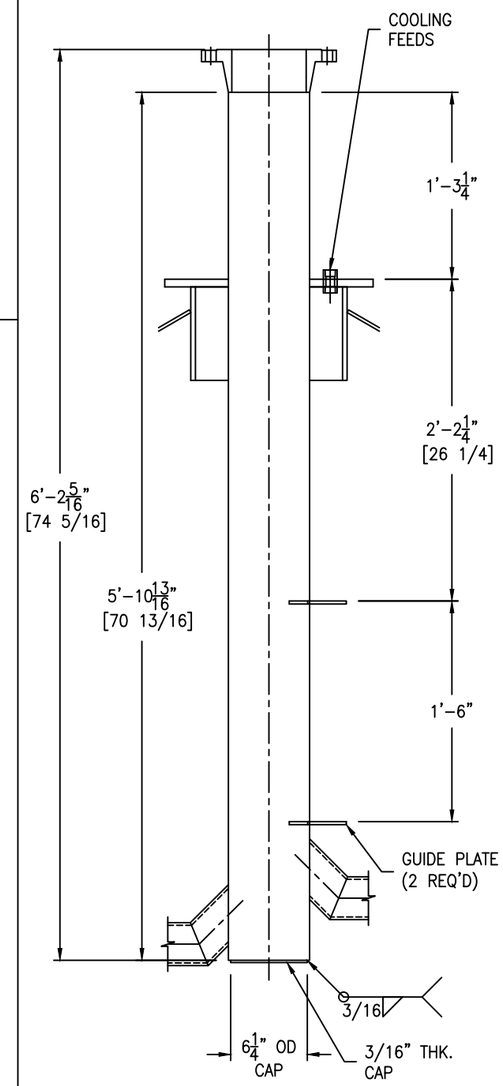

NOZZLE N1 DETAIL

SCALE: 1 1/2" = 1'-0"

FC-14

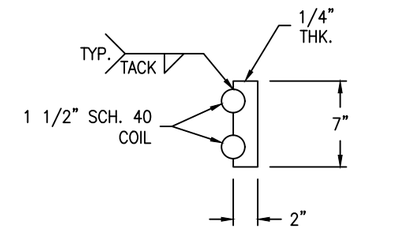

COIL BRACE DETAIL

(4 REQ'D) SCALE: 1 1/2" = 1'-0"

FC-14

GT-11

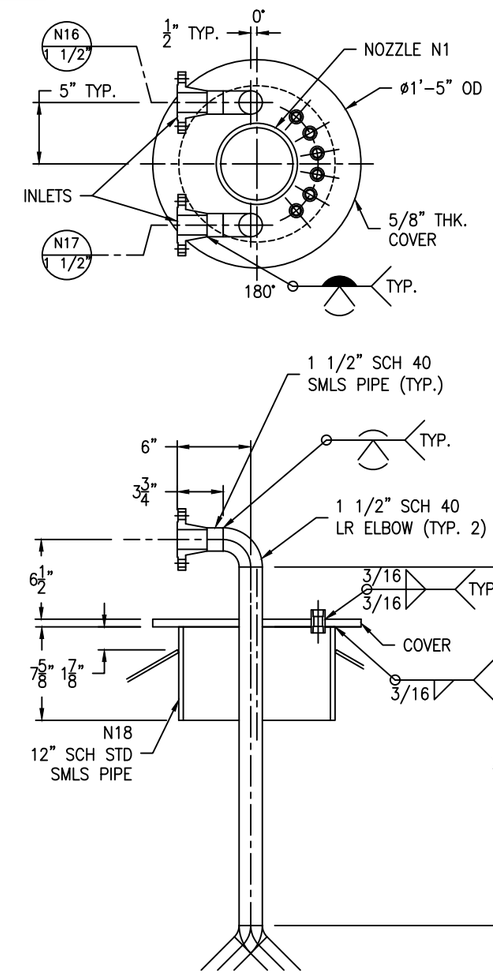

COOLING FEED NOZZLES DETAIL

SCALE: 1 1/2" = 1'-0"

REV	D.BY	C.BY	DATE	DESCRIPTION
2				AS BUILT
1	RS	NP	12/17/25	CERTIFIED
0	RS	AD/HP	11/13/25	APPROVAL

⚠ REVISIONS

Savannah Tank & Equipment Corp.
1517 Telfair Road, Savannah, GA 31415
(912) 233-8902

DRAWN BY: RS
CHK'D BY: AD/HP
APPROVED BY: NP
SCALE: 1/2" = 1'-0"

Airgas Nitrous Oxide
SST N2O REACTOR
EQUIP. #R-1
CUST. PO #3000836264

DRAWING NO.: 055-25-3 SHT 3 OF 5 REV. SET 1

FC-14

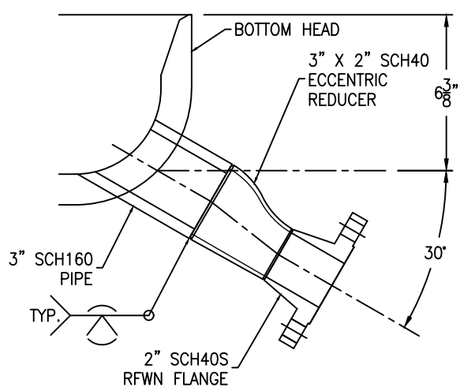

NOZ. N7 DETAIL

SCALE: 3" = 1'-0"

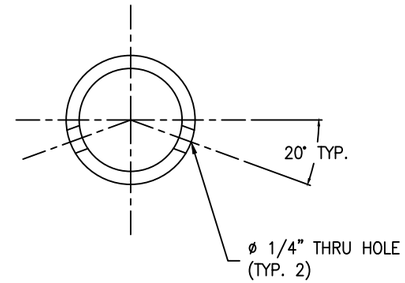

*NOTE: HOLES TO BE SPACED ON 3" CENTERS ALONG ENTIRE SPARGER.

TYP. SPARGER DETAIL

SCALE: FULL

FC-14

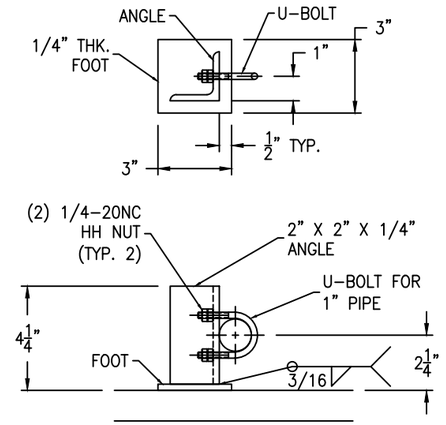

SPARGER PIPE SUPPORT DETAIL

(6 REQ'D) SCALE: 3" = 1'-0"

FC-14

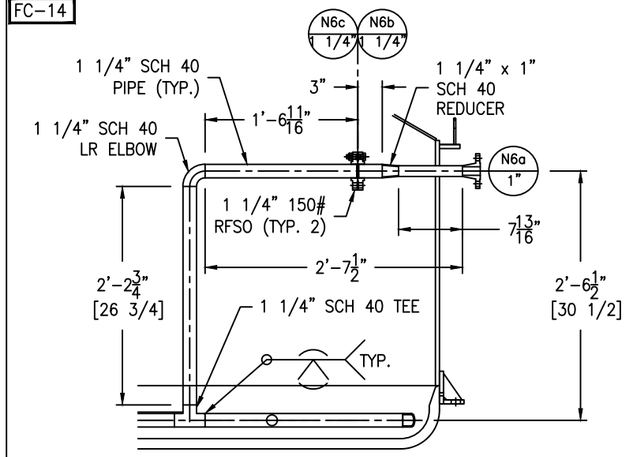

NOZZLE N6a, N6b & N6c DETAIL

SCALE: 1" = 1'-0"

FC-14

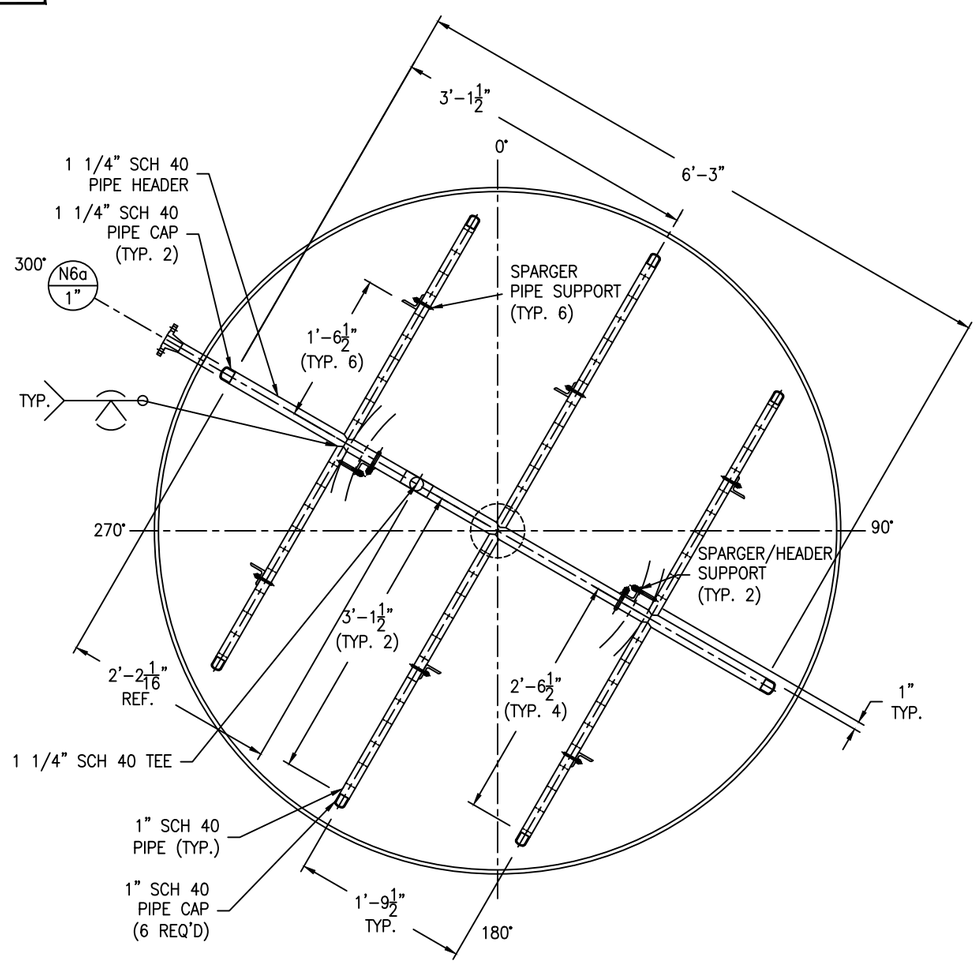

SPARGER PIPING DETAIL

SCALE: 1" = 1'-0"

FC-14

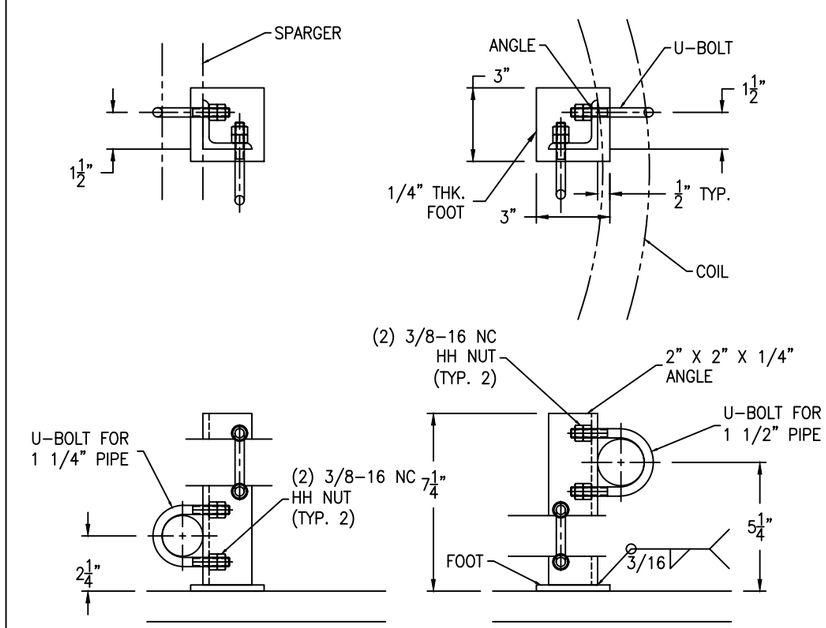

SPARGER/HEADER SUPP. DET.

(2 REQ'D) SCALE: 3" = 1'-0"

NOZZLE BOLTING

N6b & N6c: (4) 1/2-13 NC x 2" HH BOLT (SA193-B8)
(4) 1/2-13 NC HH NUT (SA194-8)
(1) 1 1/4" 150# RING GASKET 1/8" THK.

SPARGER HEADER U-BOLTS

(2) U-BOLTS FOR 1 1/4" PIPE 3/8-16 NC (SA193-B8)
(8) 3/8-16 NC HH NUT (SA194-8)

SPARGER BRANCHES U-BOLTS

(6) U-BOLTS FOR 1 " PIPE 1/4-20 NC (SA193-B8)
(24) 1/4-20 NC HH NUT (SA194-8)

HEADER U-BOLTS

(2) U-BOLTS FOR 1 1/2" PIPE 3/8-16 NC (SA193-B8)
(8) 3/8-16 NC HH NUT (SA194-8)

REV	D.BY	C.BY	DATE	DESCRIPTION
2				AS BUILT
1	RS	NP	12/17/25	CERTIFIED
0	RS	AD/HP	11/13/25	APPROVAL

⚠ REVISIONS

Savannah Tank & Equipment Corp.
1517 Telfair Road, Savannah, GA 31415
(912) 233-8902

DRAWN BY: RS
CHK'D BY: AD/HP
APPROVED BY: NP
SCALE: 1/4" = 1'-0"

Airgas Nitrous Oxide
SST N2O REACTOR
EQUIP. #R-1
CUST. PO #3000836264

DRAWING NO.: 055-25-4 SHT 4 OF 5 REV. SET 1

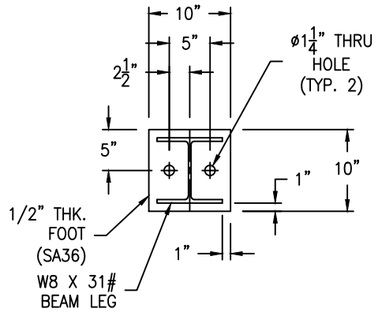

FOOT DETAIL

(4 REQ'D) SCALE: 1" = 1'-0"

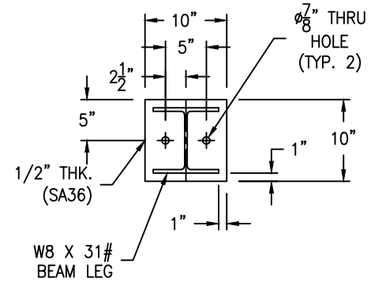

SUPPORT PLATE DETAIL

(12 REQ'D) SCALE: 1" = 1'-0"

FC-38

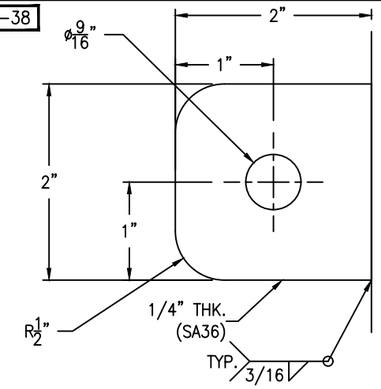

GROUND LUG IS LOCATED @ 315°

GROUND LUG DETAIL

SCALE: 1'-0" = 1'-0"

FC-38

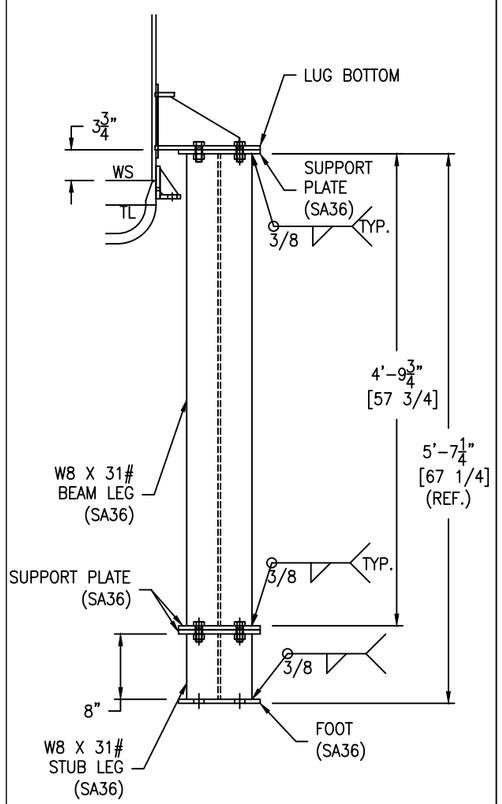

LEG DETAIL

(4 REQ'D) SCALE: 1" = 1'-0"

FC-14
FC-38
FC-39

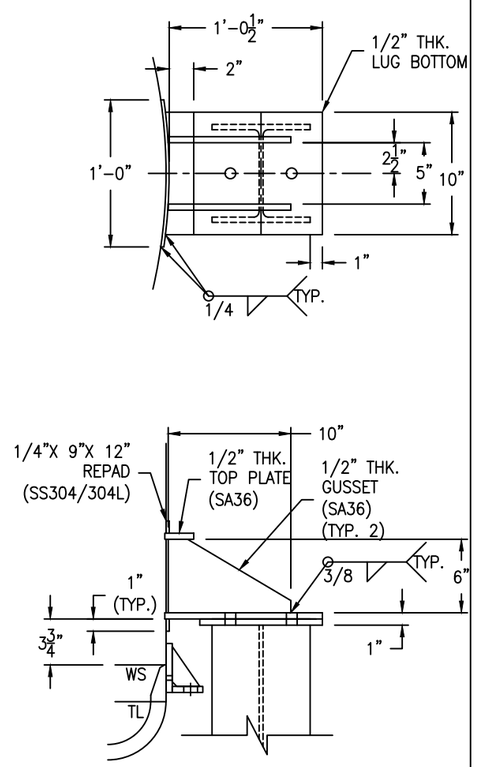

LUG SUPPORT DETAIL

(4 REQ'D) SCALE: 1 1/2" = 1'-0"

BOLTING FOR LEG
(16) 3/4-10 NC x 2" HH BOLT
(16) 3/4-10 NC HH NUT

REV	D.BY	C.BY	DATE	DESCRIPTION
2				AS BUILT
1	RS	NP	12/17/25	CERTIFIED
0	RS	AD/HP	11/13/25	APPROVAL

⚠1 REVISIONS

Savannah Tank & Equipment Corp.
1517 Telfair Road, Savannah, GA 31415
(912) 233-8902

DRAWN BY: RS
CHK'D BY: AD/HP
APPROVED BY: NP
SCALE: 1/2" = 1'-0"

Airgas Nitrous Oxide
SST N2O REACTOR
EQUIP. #R-1
CUST. PO #3000836264

DRAWING NO.: 055-25-5 SHT 5 OF 5 REV. SET 1